OMB Number: 0610-0096
Expiration Date: 11/30/2021

EDA PROJECT SIGN

The Contractor shall supply, erect, and maintain in good condition a project sign according to the specifications set forth below:

EDA SITE SIGN SPECIFICATIONS

Size: 4' x 8' x ¾"

Materials: Exterior grade/MDO plywood (APA rating A-B)

Supports: 4" x 4" x 12' posts with 2" x 4" cross branching

Erection: Posts shall be set a minimum of three feet deep in concrete footings that are at least 12" in diameter.

Paint: Outdoor enamel

Colors: Jet Black, Blue (PMS300), and Gold (PMS7406). Specifically, on white background the following will be placed:

The U. S. Department of Commerce seal in blue, black, and gold;

"EDA" in blue;

"U. S. DEPARTMENT OF COMMERCE ECONOMIC DEVELOPMENT ADMINISTRATION" in black;

"In partnership with" in blue;

(Actual name of the) "EDA Grant Recipient" in black;

"Donald J. Trump, President of the United States" in black.

Lettering: Specific fonts are named below; positioning will be as shown on the attached illustration.

"U. S. DEPARTMENT OF COMMERCE ECONOMIC DEVELOPMENT ADMINISTRATION" use Bank Gothic Medium - BANK GOTHIC MED

"In partnership with" use Univers™ 55 Oblique - *Univers 55*

(Name of) "EDA Grant Recipient" use Univers™ Extra Black 85 **Univers 85**

"Donald J. Trump, President of the United States" use Univers™ 55 Oblique - *Univers 55*

Project signs will not be erected on public highway rights-of-way. If any possibility exists for obstruction to traffic line of sight, the location and height of the sign will be coordinated with the agency responsible for highway or street safety in the area.

The EDA Regional Director may permit modifications to these specifications if they conflict with state law or local ordinances.

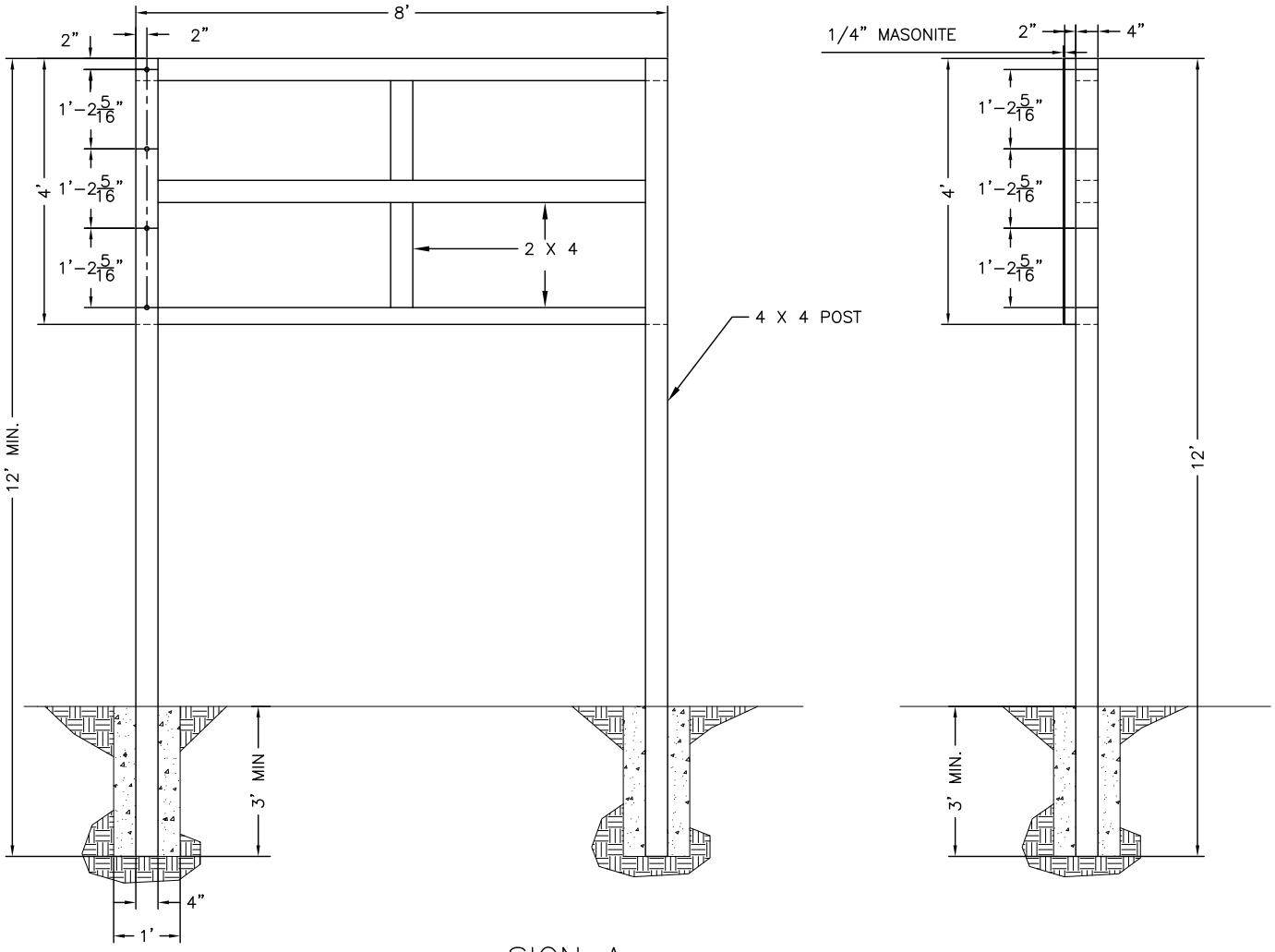

SIGN A
MASONITE SIGN

SCALE: 3/8" = 1'

PROJECT - SIGN A

ECONOMIC DEVELOPMENT ADMINISTRATION

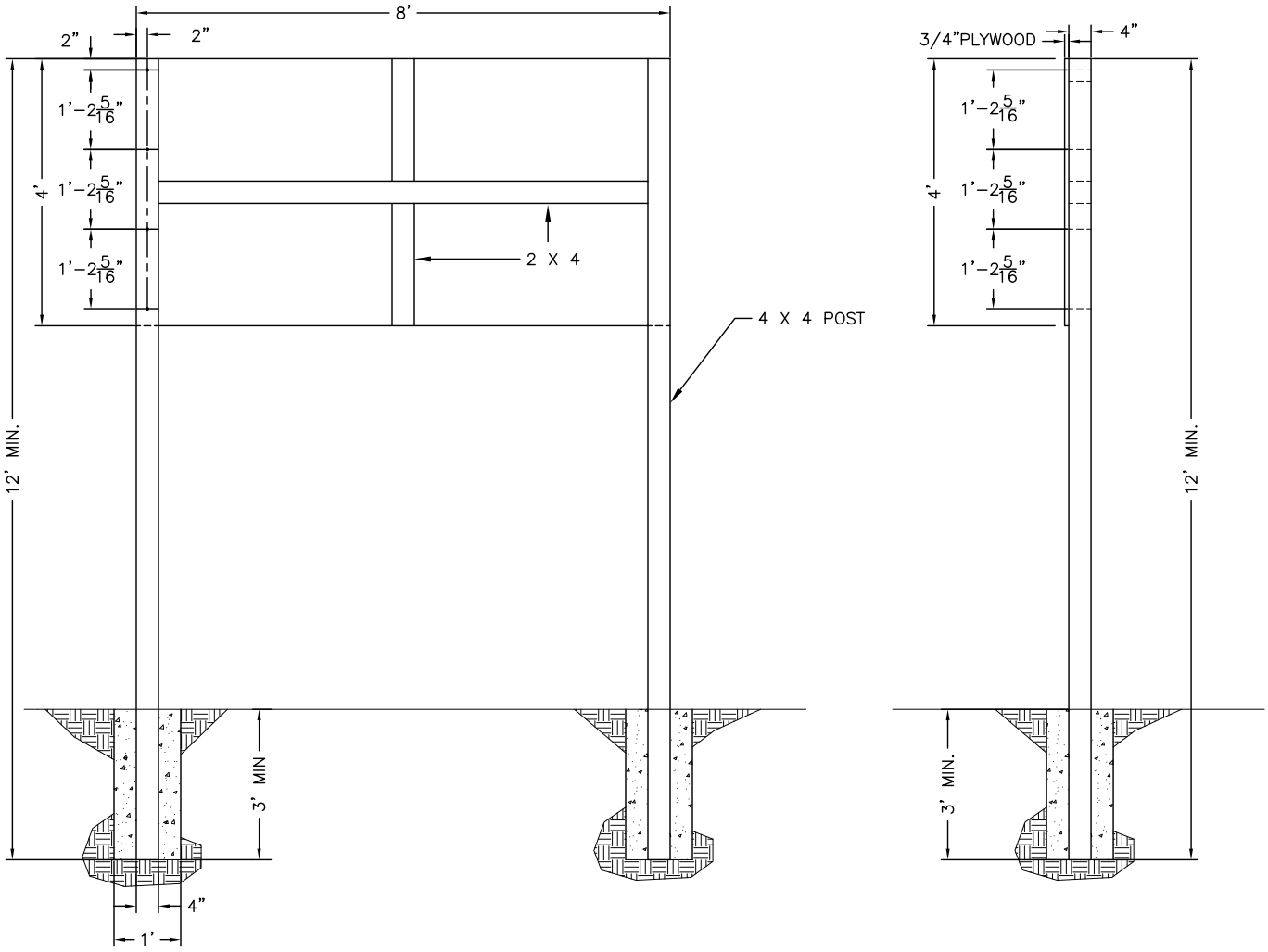

SIGN B
PLYWOOD SIGN
SCALE: 3/8" = 1'

PROJECT - SIGN B

ECONOMIC DEVELOPMENT ADMINISTRATION

U.S. Department of Commerce Economic Development Administration

In partnership with

<EDA Grant Recipient Name>

Donald J. Trump, President of the United States

2.25”

13.5”

1.75”

1.75”

10”

Black
Blue= PMS300
Gold= PMS7406

EDA

2.0”

1.5”

4.0”

3.0”

3.0”

3.75”

3.0”

4.25”

3.75”

4.0”

48”

U.S. Department of Commerce Economic Development Administration

In partnership with

<EDA Grant Recipient Name>

Donald J. Trump, President of the United States